Dynamic Stiffness and the Advantages of Externally Pressurized Fluid-Film Bearings

by Donald E. Bently

Founder, Chairman, and CEO,
Bently Nevada Corporation, and
President,
Bently Rotor Dynamics
Research Corporation
e-mail: don@bently.com

and Alex Petchenev

Research Scientist,
Bently Rotor Dynamics
Research Corporation
e-mail: alex.petchenev@bently.com

Most turbomachinery in use today employs oil-lubricated sleeve bearings. These bearings have evolved over the last century, but virtually all share the following characteristics:

- They are partially, rather than fully, lubricated.
- They are low-pressure; lubricant supply pressure is generally around 15 to 20 psi (103 to 138 kPa).
- They rely upon relative motion between static and rotating surfaces to generate the fluid film.

As we will see, bearings with the above three characteristics are generally thought to be more stable, and thus inherently better, than externally pressurized designs. Recent research, however, indicates that the opposite is true: modern bearings using externally pressurized designs are inherently more stable and offer many advantages over conventional bearing designs. This article will examine both conventional and externally pressurized fluid-film bearings.

Discussion of the differences in fluid-film bearing types is intimately linked to a discussion of Dynamic Stiffness. While numerous papers describing Dynamic Stiffness have been published by Bently Nevada and Bently Rotor Dynamics Research Corporation, they rely primarily on rigorous mathematical descriptions and experimental results. Since the mathematical and experimental foundation for the topics in this article are already well established, this article addresses Dynamic Stiffness in simple terms, relying on simple physical descriptions rather than complex mathematics. [Editor's Note: For those unfamiliar with the quantitative details of Dynamic Stiffness calculations and derivations, the next issue of ORBIT will feature an extensive tutorial, complete with examples.]

Terminology

When referring to fluid-film bearing types and principles of operation, various authors use different terminology, which can sometimes result in confusion. Before proceeding, a review of terminology used in the literature, and a clarification of the terminology used and preferred by Bently Nevada, is helpful.

- **Bearing** – The stationary surface supporting a rotating shaft, in which the journal rotates.
- **Journal** – The rotating surface on the shaft that is designed to be in contact with the fluid film in the bearing clearance.
- **Fluid-Film Bearing** – A bearing in which the shaft is supported by a thin layer of lubricating fluid, and the rotating and stationary parts are not in direct contact with one another. Other bearing types, such as dry bearings and rolling element bearings, exist.
- **Rolling Element Bearing** – A bearing in which the shaft is supported by metal-to-metal contact between the rotating and stationary parts. This is done by using rolling elements that minimize friction. These bearings are usually lubricated to further reduce friction and to provide cooling.
- **Anti-Friction Bearing** – Any bearing in which moving parts are designed to touch one another, whether rolling element bearing, dry bearing, or other.
- **Dry Bearing** – A design in which the journal rotates directly on the bearing surface without any intervening fluid or rolling elements. Special low-friction materials

and coatings are used to reduce the coefficient of friction between the two surfaces. The oil-impregnated bronze bushings used in Bently Nevada rotor kits are examples of dry bearings.

- **Internally Pressurized Bearing** – A bearing in which the rotation of the shaft "drags" the fluid in the direction of rotation to produce a fluid film. These bearings will often have a lubrication supply system that is low-pressure, typically 15 to 20 psi (103 to 138 kPa). The supply pressure is not designed to contribute to the rotor dynamic properties of the bearing in any way; it is simply designed to cause adequate flow through the bearing to provide lubricant cooling (and possibly movement through a strainer or filter to clean the lubricant).
- **Hydrodynamic Bearing** – The most common term for an internally pressurized bearing.
- **Self-Acting Bearing** – A less common term for an internally pressurized bearing. The terms "internally pressurized," "hydrodynamic," and "self-acting" are generally used interchangeably.
- **Externally Pressurized Bearing** – A bearing in which the lubricant is supplied at pressures high enough to contribute to, or govern, the rotor dynamic properties of the bearing. Externally pressurized bearings can be further categorized as follows:
  - **Hydrostatic Bearing** – A bearing that does not rely upon rotation of the journal to develop a fluid film; the film is present even with no shaft rotation.
  - **Combination Bearing** – Sometimes also called a "hybrid" bearing, bearings of this type exhibit both hydrostatic and hydrodynamic characteristics. The degree to which the bearing exhibits predominantly hydrostatic or hydrodynamic characteristics depends on the rotational speed and eccentricity at which it is operated.
- **Fully Lubricated Bearing** – A bearing designed to operate with a fully developed fluid film. The fluid may be totally liquid, totally gas, or any homogeneous mixture of the two. While the terms "fully developed fluid film" and "fully lubricated" are often used interchangeably, a fully developed fluid film is really a *characteristic* of a properly operating fully lubricated bearing. Sometimes, these bearings are also referred to as "flooded" or "360 degree" lubrication.
- **Fully Developed Fluid Film** – A condition in which the fluid film fully encircles the journal, with no voids, bubbles, or air pockets in the bearing clearance.
- **Partially Lubricated Bearing** – A bearing designed to have lubricant that does not fully encircle the journal. Sometimes, these bearings are also referred to as "starved" or "180 degree" lubrication.

While the term "hydrodynamic bearing" is generally well-understood, and is widespread in the literature, the terminology when referring to other types of bearings can be somewhat confusing. Also, nearly *all* bearings exhibit both hydrodynamic and hydrostatic behavior, depending on the rotational speed and eccentricity at which they are operated. Thus, the concept of "combination" or "hybrid" tendencies can apply to many bearings. For this reason, Bently Nevada does not prefer to use the term "hybrid" or "combination" when referring to bearings. Instead, we attempt to use the most descriptive terminology possible, such as "externally pressurized fluid-film." This, for example, is the generic terminology we use when referring to our Bently ServoFluid™ Control Bearing, and it helps to differentiate it from hydrostatic, hydrodynamic, or other bearing types.

Historical Background

Early theories of fluid bearing behavior assumed that the load from the rotating journal was applied directly to the stationary part of the bearing; the role of the fluid was only to decrease friction. Then, at the end of the 19th century, Beauchamp Tower performed a series of precise experiments that measured oil pressure in different parts of the bearing [1, 2]. He came to the following conclusion: Pressure distribution within the oil film is such that the *film* actually exerts the load-carrying forces. Thus, it was the first time a fluid-film bearing was considered a *dynamic system* with certain stiffness properties revealed via oil pressure measurements.

In 1886, a theory by Osborne Reynolds [3] explained these experiments. It produced the famous Reynolds Equation, which described oil pressure distribution in the bearing. The first use of Reynolds' theory of practical significance was an approximate solution for a specific case of the Reynolds Equation. It was obtained by Fred Ocvirk [4] in 1952 (the so-called Ocvirk solution for an infinitely short bearing). It took more than a century from the time Reynolds originally published his work until a general-case solution for the Reynolds Equation was derived by Bently Rotor Dynamics Research Corporation [5].

By the early 1900s, bearing oil pressure calculations clearly distinguished between full (fully encircling the journal) and partial lubrication. In 1919, W. J. Harrison [6] published work predicting that a fully lubricated bearing would be unstable. This has led to the widely adopted practice of deliberately using partially lubricated rather than fully lubricated designs in the belief that they are more stable. It has also led to the almost universal use of low-pressure bearings, as certain experimental work suggested that pressurizing a fully lubricated bearing would make it more unstable. Recent research, however, contradicts this belief, showing that an *adequately* pressurized and fully lubricated bearing is extraordinarily stable. By adequately pressurized, this means the lubricant is forced to move primarily *along* the shaft (axial flow, i.e., parallel to the shaft), rather than *around* the shaft (circumferential flow, i.e., tangential flow).

While most of the world's standards are currently based on the use of conventional hydrodynamic bearings for turbomachinery, there have been a few notable exceptions. Dr. Judson Swearingen [7], founder of Rotoflow, utilized an externally pressurized bearing design in his line of turbo expanders. Swearingen was an excellent student of rotor dynamic fundamentals. He contributed enormously to the modern design of rotating machinery, although some of his designs are not widely used.

One early documented example of externally pressurized lubrication, relying purely on hydrostatic rather than hydrodynamic principles, was at the Paris Industrial Exhibition in 1878. An exhibit called the "Ice Railroad" consisted of four legs supporting a large mass. The legs rested on a flat steel surface, and oil was pumped down the legs with sufficient pressure to essentially float each leg on a layer of oil. The nearly frictionless mass could then be moved about with ease.

A more modern example of a type of externally pressurized "bearing" that most of us are familiar with is the popular arcade game called "air hockey." The playing table has numerous small holes, closely spaced, through which high-pressure air is forced, allowing the hockey puck to "float," with virtually no friction.

A Bearing Model

A simple spring can be modeled by the familiar equation:

$$\text{Force} = \text{Stiffness} \times \text{Displacement} \qquad (1)$$

For a spring, stiffness is a scalar rather than vector quantity, and the displacement is in the direction of the applied force. For a fluid-film bearing, however, stiffness is a *vector* quantity, consisting of a radial component and a tangential component. We refer to these two components of Dynamic Stiffness as follows:

1. **Direct Dynamic Stiffness.** This stiffness component is in the direction of the applied load.
2. **Quadrature Dynamic Stiffness.** This stiffness component is in the direction *orthogonal* to the applied load.

While our simple spring equation still holds, the stiffness term now has both direct and quadrature components, as does the rotor's response. Therefore, the simple equation (1) is transformed into a vector equation (2):

$$\overrightarrow{\text{Force}} = [\text{Direct Dynamic Stiffness} + j\,(\text{Quadrature Dynamic Stiffness})] \times \overrightarrow{\text{Displacement}} \qquad (2)$$

For those unfamiliar with the j-operator, it can be thought of as denoting a component that is "90 degrees away" or "perpendicular to" the other component. Hence, the terms "direct" and "quadrature." Mathematically expressed, $j = \sqrt{-1}$. Figure 1 illustrates the direct and quadrature components. When pushing down on a rotating shaft, it not only moves down, *it also moves to the side* (i.e., in the orthogonal direction). Direct and Quadrature Dynamic Stiffness are both important parameters of a fluid-film bearing. Numerous publications ([5, 8-10] represent just four of many) are dedicated to calculating and measuring these parameters. Lambda (λ), the fluid circumferential average velocity ratio, which together with rotational speed and damping determines the fluid drag force [5, 9], is the most important dynamic parameter, closely connected with fluid-induced instability problems [8, 11].

Direct Dynamic Stiffness vs. Quadrature Dynamic Stiffness

In earlier theoretical works ([4], for example) it was erroneously believed that no Direct Dynamic Stiffness exists

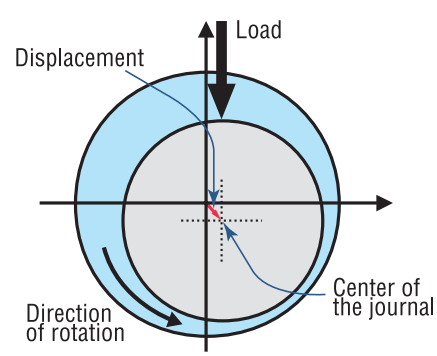

Figure 1. Journal in a fluid-film bearing yields to an applied load in both direct and quadrature directions.

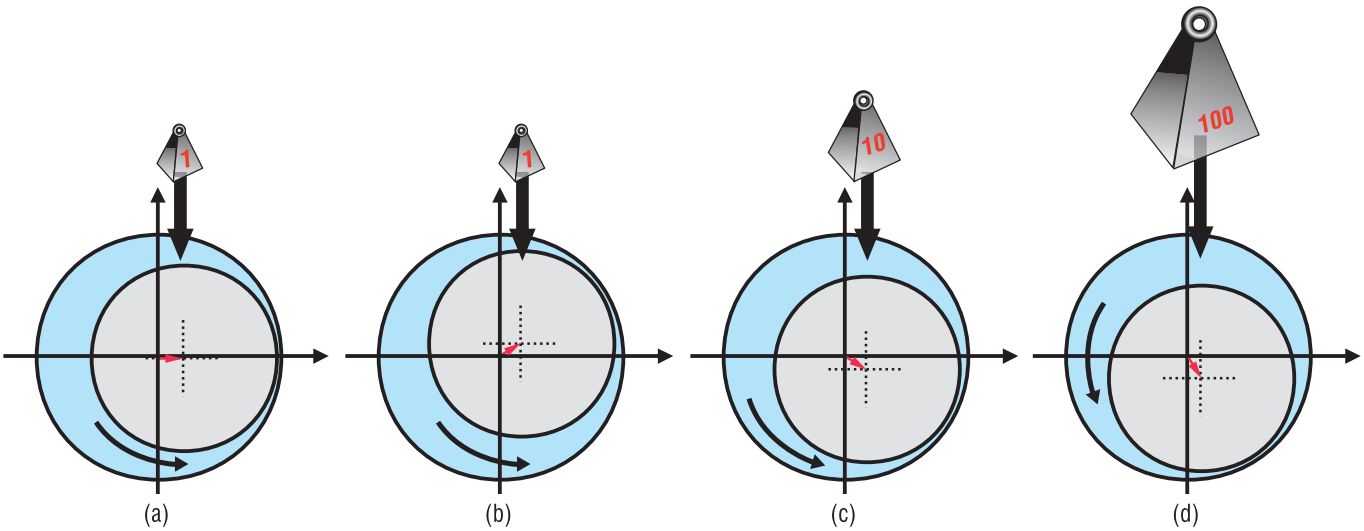

Figure 2. For a fully developed fluid film, the heavier the load, the more the journal's displacement direction coincides with the applied load's direction.

in a fluid-film journal bearing when there is a fully developed fluid film. However, this belief contradicted experimental data, which frequently showed behavior of a fluid-film journal bearing under load as shown in Figure 2.

Under a light load (Figure 2a), the journal displacement is almost perpendicular to the direction of the load, which indicates that the total Dynamic Stiffness is dominated by the quadrature, rather than direct, term. That is, the rotor moves perpendicular to the applied force. When fluidic inertia effects are present, lightly loaded rotors may even move *above* the bearing centerline (Figure 2b). With increasing load (Figure 2c), the rotor begins to move in the direction of the applied load. Finally, under very heavy load (Figure 2d), the Dynamic Stiffness is dominated by the direct, rather than quadrature, component. This yields displacements primarily in the direction of the applied load.

Partially Lubricated Bearings, Direct Dynamic Stiffness, and Stability

When the fluid film is not fully developed, Direct Dynamic Stiffness increases dramatically and eliminates the fluidic inertia effect. This results in a change of both direction and magnitude of displacement: the direction becomes closer to that of the applied load and the magnitude decreases, since total Dynamic Stiffness (including both direct and quadrature components) becomes larger (see Figure 3).

Direct Dynamic Stiffness plays an important role in the problem of stability: Stability requires that the Direct Dynamic Stiffness be of the same order of magnitude as the Quadrature Dynamic Stiffness. As we have shown, introduction of some void into the circumferential flow does increase the Direct Dynamic Stiffness. Unfortunately, it was erroneously concluded that because introduction of a void (partially lubricated bearing) increased the Direct Stiffness of a bearing, it was an effective way to improve stability. Later such an approach was shown to be misguided. Starvation of a bearing (which is just another term for introducing a void) introduces a new, dangerous type of instability [12], which sometimes leads to catastrophic failures [13-15]. Such failures can occur when the rotor is in a classic fluid whirl condition, where the whirling frequency is about 47% of shaft rotational speed (0.47X). This causes the journal to act like a pump – pumping the lubricant out of the bearing. Under such conditions, lubricant flows not only through the usual drain openings, but also through the supply pipes, and in the case of low lubricant supply pressure, results in gradual acceleration of lubricant starvation. This can ultimately result in the transformation of the whirling frequency from 0.47X to 0.33X, which produces a wide band of other frequency components. The latter whirling frequency leads to dramatic changes in local temperature, and thinning of the lubricant, further worsening lubrication conditions. The final result may be as dramatic as charring of lubricant in lubricant passages [14].

Instead, the proper way to improve Direct Dynamic Stiffness is by increasing the pressure drop *along* the bearing. Following are the basic principles of Direct Dynamic Stiffness, as well as major factors affecting it.

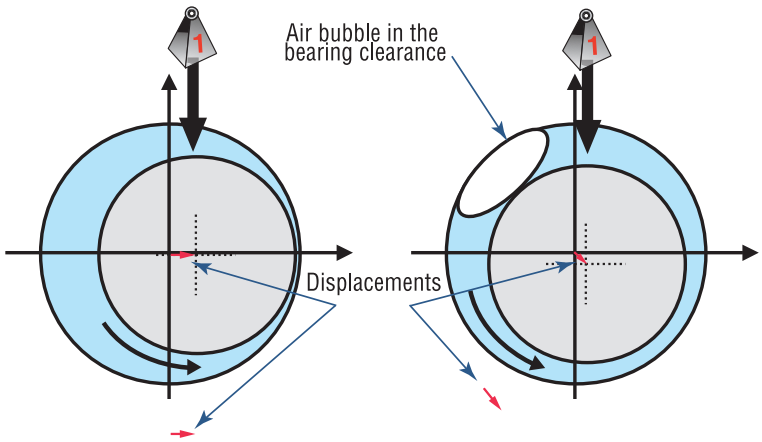

Figure 3. Introduction of an air bubble into the bearing clearance produces a dramatic increase in the Direct Dynamic Stiffness, and alleviates the fluidic inertia effect.

Origin of Direct Dynamic Stiffness

There are certain purely mechanical factors that affect Direct Dynamic Stiffness, such as the stiffness and mass of the rotor itself. The remaining factors, however, are the fluid dynamics of the system.

It was established long ago that the ability of a bearing to carry load is based upon a converging-diverging fluid wedge in the circumferential direction (Figure 4), which exists within a bearing (see [16] for an extended list of references). In the past, this circumferential wedge was considered by researchers as the sole contributor in a fluid-film bearing's ability to carry load. Recently, however, research has shown that fluid flow in the *axial* direction is no less important.

A fluid wedge in the circumferential direction contributes mainly to tangential forces in a bearing, which are sources of Quadrature Dynamic Stiffness [5]. There is, however, *another* wedge contributing to how well the bearing does its job. This is the pressure wedge (Figure 5) governing fluid flow in the axial direction.

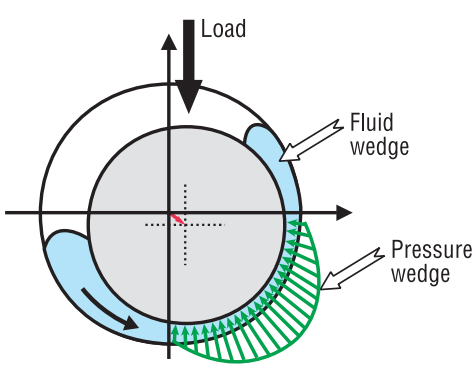

Figure 4. Lubricating fluid forms a fluid wedge in the circumferential direction. Pressure applied from fluid to the journal forms the pressure wedge.

As shown by Bently Rotor Dynamics Research Corporation [5, 9], part of Direct Dynamic Stiffness, created by fluid forces, is proportional to the pressure at which the bearing is supplied with lubricating fluid.

Thus, opposite to the Quadrature Dynamic Stiffness, the Direct Dynamic Stiffness originates from the axial pressure wedge, rather than the circumferential wedge. Flow in the axial direction is determined by the supply pressure, rotative speed, lubricant viscosity, and the pressure drop along the bearing.

Hydrodynamic versus Externally Pressurized, Fully Lubricated Bearings

In hydrodynamic fluid-film bearings, the ability to carry load is mainly produced by means of a hydrodynamic interaction between the bearing and rapidly rotating journal. Circumferential flow of the fluid is usually much faster than the axial flow because the rotating motion of the shaft tends to "drag" the fluid into motion, with speed up to that of the shaft's rotation. This leads to high Quadrature Stiffness. As noted previously, high Quadrature Stiffness without adequate Direct Stiffness leads to instability. Historically, hydrodynamic

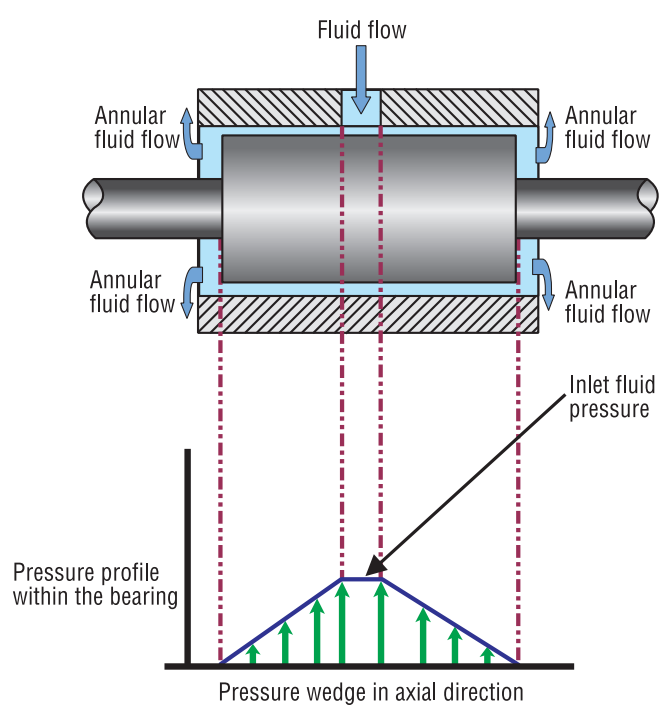

Figure 5. Fluid pressure wedge in the axial direction.

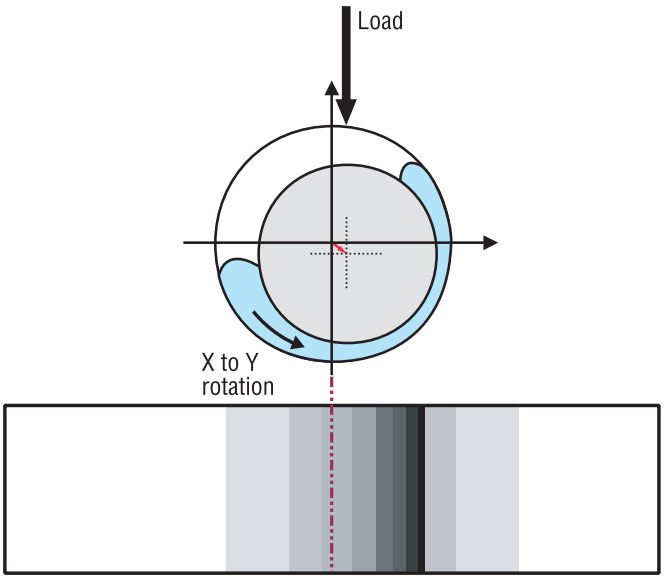

Figure 6. Pressure distribution profile for tangential fluid-film wedge in partially lubricated, low-pressure bearing. Fluid flows primarily *around* the journal. Darker shading denotes higher pressure.

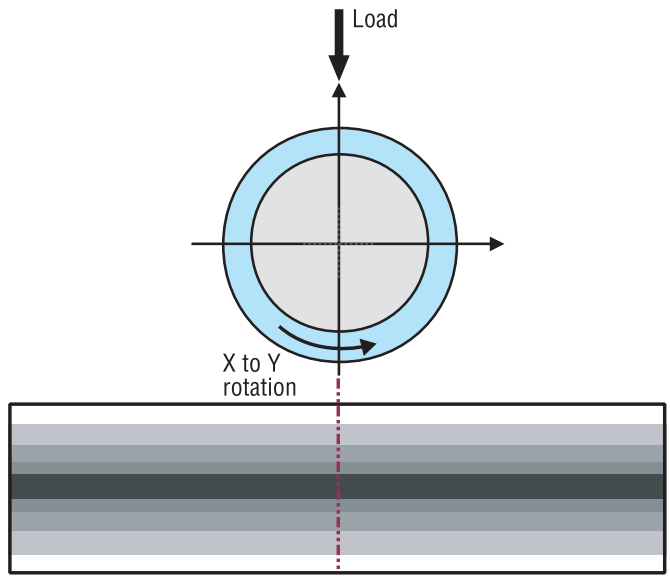

Figure 7. Pressure distribution profile for axial fluid-film wedge in fully lubricated, high-pressure bearing. Fluid flows primarily *axially* along the journal. Darker shading denotes higher pressure.

bearing designers have addressed this by increasing the Direct Stiffness as follows:

1. "Starving" the bearing by intentionally keeping it from developing a fully developed fluid film, and relying instead on partially lubricated bearings. The voids introduced in a partially lubricated bearing (Figure 3) increase the Direct Stiffness.
2. Relying on radial preloads (such as gravity on a horizontal machine) to introduce higher Direct Stiffness. Often, machines are even intentionally misaligned to introduce a "stabilizing" preload force.

A better mechanism, however, for increasing the Direct Stiffness is to employ a fully developed fluid film (fully lubricated bearing) and to increase the axial pressure wedge (Figure 5), by increasing the inlet pressure at which the bearing is supplied with lubricating fluid (and hence, an increase in the axial flow). Ironically, this is exactly *opposite* to what is generally taught today. Namely, that externally pressurized bearings should be avoided because they are less stable; and that partially, rather than fully, lubricated bearings are more stable. Bently Nevada's experimental results with a fully lubricated, pressurized bearing (i.e., the Bently ServoFluid™ Control Bearing) show its design to be far more stable than hydrodynamic bearings.

Our conclusion is to use externally pressurized fluid-film bearings, where pressure at the bearing's lubrication ports is high enough to create even radial flow and dramatically increased axial flow. Figures 6 and 7 illustrate the difference in pressure profiles for bearings with primarily tangential flow versus those with primarily axial flow.

Summary

In hydrodynamic fluid-film bearings, the ability to carry load is mainly produced by means of the hydrodynamic interaction between the bearing and its rapidly rotating journal. There are only two directions of considerable fluid flow: circumferential and axial. Fluid flow in the circumferential direction creates a fluid wedge with pressure varying greatly in this direction. When a fluid film is fully developed (no voids), the circumferential wedge produces only Quadrature Dynamic Stiffness.

By supplying adequate external pressurization to such a fully lubricated bearing, a sufficient pressure wedge in the axial direction can be produced, which provides axial flow. This axial pressure wedge contributes to Direct Dynamic Stiffness of the bearing. Direct Dynamic Stiffness not only helps the load carrying capacity of the bearing, but also helps to solve stability problems, which are quite common in fluid-handling machinery.

While currently widely employed, "bearing starvation" is a poor and dangerous way to influence stability. Instead, the use of externally pressurized fluid-film bearings, such as the Bently ServoFluid™ Control Bearing, leads to increased axial flow of lubricant, which improves the axial pressure wedge,

culminating in increased Direct Dynamic Stiffness. When a bearing can rely primarily on axial flow of lubricant (rather than tangential) for the support wedge, superior bearing performance results. This permits the design and operation of machinery with much higher inherent stability and better all-around performance characteristics.

References:

1. Tower, B., "First Report on Friction Experiments," *Proc. Inst. Mech. Engrs.*, (a) 1883, pp. 632-659; (b) 1884, pp.29-35.
2. Tower, B., "Second Report on Friction Experiments," *Proc. Inst. Mech. Engrs.*, 1885, pp. 58-70.
3. Reynolds, O., "On the Theory of Lubrication and Its Application to Mr. Beauchamp Tower's Experiments Including an Experimental Determination of the Viscosity of Olive Oil," *Philos. Trans. R. Soc. London, Series A*, Vol. 177, Part 1, 1886, pp.157-234.
4. Ocvirk, F.W., "Short-Bearing Approximation for Full Journal Bearings," *National Advisory Committee for Aeronautics (NACA) TN 2808*, 1952.
5. Petchenev, A., Goldman, P., Muszynska, A., Bently, D.E., "Analytical Study on the Fluid Journal Bearing/Seal/Rotor System," *FED-Vol.207, The Joint ASME & JSME Fluids Engineering Annual Conference*, Hilton Head Isl., SC, 1995, p.33-38.
6. Harrison, W.J., "The Hydrodynamical Theory of Lubrication of a Cylindrical Bearing Under Variable Load and of a Pivot Bearing," *Transactions of the Cambridge Philosophical Society*, Vol. 22, April 24, 1919, pp. 373-388.
7. "Dr. Judson S. Swearingen," *ORBIT*, Vol. 20, No. 4, 1999, pp.68-69.
8. Bently, D.E., Muszynska, A., "Identification of Bearing and Seal Dynamic Stiffness Parameters by Steady-State Load and Squeeze Film Tests," *Proceedings of the Symposium on Instability in Rotating Machinery*, Carson City, Nevada, June 1985; NASA Conference Publication, No. 2409, 1985, pp.301-316.
9. Goldman, P., Petchenev, A., Bently, D.E., Muszynska, A., "Torque And Power Loss in a Cylindrical Fluid-Lubricated Bearing/Rotor System," *96-GT-408, IGTI/ASME TURBO EXPO*, Birmingham, UK, 1996, pp.1-6.
10. Kirk, R.G., Gunter, E.J., "Short Bearing Analysis Applied to Rotor Dynamics, Part I and II," *Journ. of Lubr. Techn., Trans. of the ASME*, 1975.
11. Bently, D.E., Muszynska, A., "Role of Circumferential Flow in the Stability of Fluid-Handling Machine Rotors," *Texas A&M Fifth Workshop on Rotordynamics Instability Problems in High Performance Turbomachinery*, May 16-18, 1988, College Station, Texas.
12. Petchenev, A., Bently, D.E., Goldman, P., "1/3 Whirl Phenomenon: Case History on Vibration Response of a Rotor Supported in One Rigid and One Poorly Lubricated Fluid-Film Bearing," *Bently Rotor Dynamic Research Corporation, Report No. 6*, 1999.
13. Petchenev, A., Bently, D.E., Muszynska, A., Goldman, P., "Experimental Study of a Fluid-Film Bearing With a Floating Ring," *IMAC-XVII: A Conference & Exposition on Structural Dynamics*, February 8-11, 1999, Kissimmee, Florida, Vol. 1, pp. 283-289.
14. Petchenev, A., Bently, D.E., Muszynska, A., Goldman, P., Grissom, R.L., "Case History of a Failure of a Gas Turbine with a Floating Sleeve Bearing," *DETC99/VIB-8284, 1999 ASME Design Engineering Technical Conference*, September 12-15, 1999, Las Vegas, Nevada.
15. Bently, D.E., Petchenev, A., "Beware of the Use of a Floating Ring in a Fluid-Film Bearing," *ORBIT*, Vol. 21, No. 1, 2000, pp. 15-17.
16. Cameron, A., *Basic Lubrication Theory*, Ellis Horwood Ltd. Publishers, 1981.

ANNOUNCEMENTS

Donald E. Bently Receives 14th Annual Frederick P. Smarro Award

Donald E. Bently, Founder, Chairman, and Chief Executive Officer of Bently Nevada Corporation, and President of Bently Rotor Dynamics Research Corporation, is co-recipient of the 14th Annual Frederick P. Smarro Award. The award is presented to an engineer who has made a significant contribution to the discipline and practice of plant maintenance and/or engineering. Mr. Charles Bailey, previously of Eastman Chemical Company, is also a co-recipient of the award this year. The Smarro Award was established jointly by The American Society of Mechanical Engineers (Plant Engineering & Maintenance Division) and Reed Exhibition Company in 1987. The award was presented in March at the 2000 National Plant Engineering & Management Show and Conference, in Chicago, which is the venue of National Manufacturing Week.

ASME TURBO EXPO LAND, SEA & AIR 2000

The 45th ASME Gas Turbine & Aeroengine Technical Congress, Exposition & Users Symposium

8-11 May 2000
M,O,C, Sports & Fashion Center
Munich, Germany

Visit us at Stand #275. Among our products, Bently Nevada will be showing a working demonstration of the revolutionary Bently ServoFluid™ Control Bearing.

We will also be presenting the following papers: *Active Controlled Hydrostatic Bearings for a New Generation of Machines*, by Donald E. Bently, John W. Grant, and Philip C. Hanifan; *Rotor/Seal Experimental and Analytical Study on Full Annular Rub*, by Donald E. Bently, Paul Goldman, and John J. Yu; *Understanding Machinery Management – Using Machine Condition and Process Information for Maximum Benefit*, by Roger G. Harker; and *Internal Vibration Transducers on an Avon Engine* by Peyton Swan.